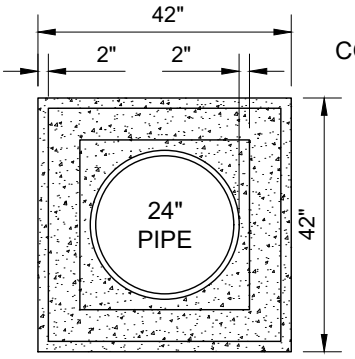

SECTION A-A
42"x42" CONCRETE PAD

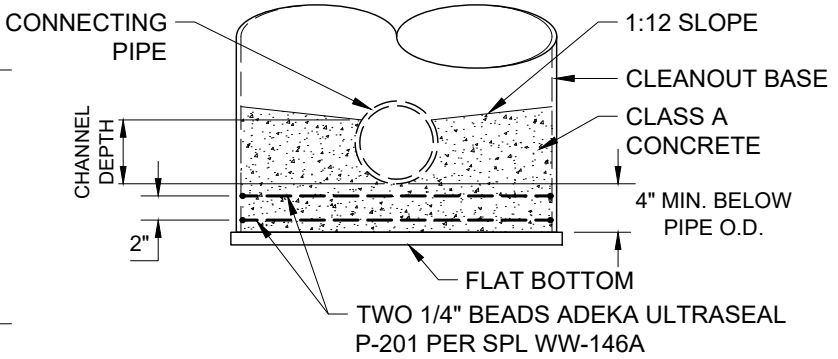

SECTION B-B
U-SHAPED INVERT CHANNEL CAST IN PLACE BY
CLEANOUT INSTALLATION CONTRACTOR

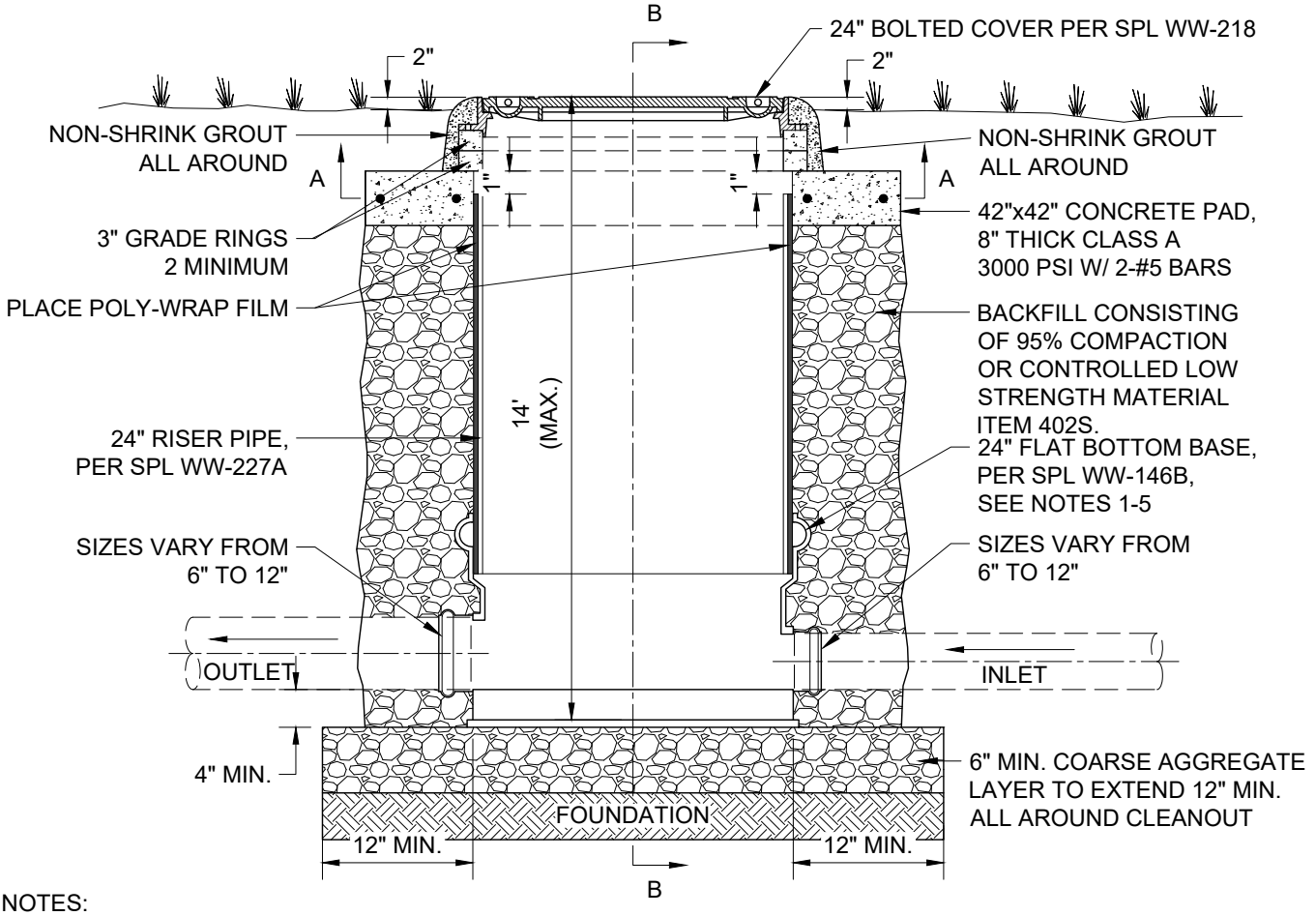

NOTES:

1. THE CLEANOUT BASE SECTION SHALL BE SUPPLIED WITH A FLAT BOTTOM WITHOUT A FABRICATOR-INSTALLED INVERT.
2. A U-SHAPED INVERT CHANNEL CONNECTING THE FLOWLINES OF THE INLET AND OUTLET PIPES SHALL BE CAST IN PLACE BY THE CLEANOUT INSTALLATION CONTRACTOR.
3. THE CHANNEL DEPTH SHALL BE 3/4 OF THE DIAMETER OF THE LARGEST PIPE CONNECTING TO THE CLEANOUT.
4. USE CLASS A CONCRETE FOR THE CAST IN PLACE INVERT AND COAT IT WITH AN ORGANIC SPRAY LINER LISTED ON SPL WW-511.
5. THE CLEANOUT FOUNDATION SHALL MEET OR EXCEED STANDARD SPECIFICATION ITEM 506.5B.
6. IN CASES WHERE THE WASTEWATER SERVICE LINE IS LARGER THAN 12" DIAMETER, THE CONTRACTOR MUST INSTALL A MINIMUM 48" DIAMETER MANHOLE IN LIEU OF THE LARGE DIAMETER CLEANOUT. THE ENGINEER MUST PROVIDE AN ACCEPTABLE SAMPLE PORT AND RECEIVE APPROVAL IN WRITING FROM THE INDUSTRIAL WASTE REVIEWER BEFORE INSTALLATION. THE 48" DIA. MANHOLE SHALL CONFORM TO STD. 506S-10 AND INCLUDE A SAMPLE PORT.

CITY OF AUSTIN AUSTIN WATER		LARGE DIAMETER CLEANOUT	
JEFF A. KYLE	08/14/2020 ADOPTED	THE ENGINEER/ARCHITECT ASSUMES RESPONSIBILITY FOR APPROPRIATE USE OF THIS STANDARD. MODIFICATIONS TO THIS STANDARD ARE PROHIBITED.	STANDARD NO. 506-AW-04 1 OF 1